FENECON Automatic Off-Grid Switch (AVU)

Installation and Service Instructions

-- Extended Compatibility Version --

Table of Contents

1. About these instructions 4
1.1. Manufacturer . . . 4
1.2. Formal information on installation and service instructions . . . 4
1.3. Version/revision . . . 4
1.4. Symbol conventions . . . 5
1.5. Structure of warning notices . . . 5
1.6. Terms and abbreviations . . . 6
2. Safety 7
2.1. Intended use . . . 7
2.2. Qualification of staff . . . 7
2.2.1. Qualified electricians . . . 7
2.2.2. Service staff . . . 7
2.3. General information about the automatic off-grid switch . . . 7
2.3.1. Installation, operation and maintenance . . . 8
2.3.2. Fire protection . . . 8
3. Technical data AVU-63-21 9
3.1. General . . . 9
3.2. Dimensions . . . 10
3.3. Terminal assignment . . . 11
3.3.1. Overview — Interior . . . 11
3.3.2. Detailed terminal assignment . . . 13
4. General description 14
4.1. System structure . . . 14
5. Assembly preparation 15
5.1. Scope of delivery . . . 15
5.2. Tools required . . . 16
6. Assembly — Automatic Off-grid Switch 18
6.1. Safety instructions . . . 18
6.2. Pictograms . . . 20
6.3. Operating materials/equipment . . . 22
6.3.1. Electrolyte solution of the battery modules . . . 22
6.3.2. Electrical equipment . . . 22
6.4. Personal protective equipment . . . 24
6.5. Spare and wear parts . . . 24

6.6. IT security . . . 24
6.7. Installation conditions and clearances at the installation site . . . 25
6.8. Wall mounting . . . 26
7. Electrical installation 27
7.1. Overview of the connections . . . 27
7.2. Connection between the individual components . . . 29
7.2.1. Connection to the inverter . . . 29
7.2.2. Connection to the EMS box . . . 30
7.2.3. Energy meter connection without external generators. . . . 31
7.2.4. Connection of an external status display (optional). . . . 33
7.3. Electrical installation with external AC generator . . . 34
7.3.1. Overview of the connections . . . 34
7.3.2. Energy meter connection with external AC generator. . . . 36
8. Display and operation 38
8.1. LED status display . . . 38
8.2. Operating activities . . . 39
9. Initial commissioning 40
9.1. Checking the installation, connections and cabling . . . 40
9.2. Settings on the monitoring relay. . . . 41
9.3. Switching on the miniature circuit breakers . . . 42
9.4. Final assembly . . . 43
9.5. Switching the system on/off . . . 44
9.5.1. Switch on . . . 44
9.5.2. Switching off . . . 44
9.6. Replacing the cartridge fuses . . . 45
10. FENECON Service 47
11. Technical maintenance 47
11.1. Tests and inspections . . . 47
11.2. Maintenance work. . . . 47
11.3. Repairs . . . 47
12. Handover to the operator 47
12.1. Information for the operator. . . . 47
13. Dismantling and disposal 48
13.1. Dismantling . . . 48
13.2. Disposal. . . . 48

14. Index **49**

14.1. Image index 49

14.2. Table index 50

Version: 2026.2.1

1. About these instructions

Personnel must have carefully read and understood these installation and service instructions before starting any work.

1.1. Manufacturer

FENECON GmbH
Gewerbepark 6
94547 Iggensbach
Germany

Phone: +49 (0) 9903 6280 0
Fax: +49 (0) 9903 6280 909
E-mail: service@fenecon.de
Internet: www.fenecon.de

1.2. Formal information on installation and service instructions

© FENECON GmbH, 2025

All rights reserved.

Reprinting, even in part, is only permitted with the permission of FENECON GmbH.

1.3. Version/revision

Version/Revision	Change	Date	Name
2026.2.1	Update of the original automatic off-grid switch manual	15/02/2026	FENECON PM

Table 1. Version/revision

1.4. Symbol conventions

	This symbol indicates an imminent danger. If this danger is not avoided, it can lead to death or serious injury.
	This symbol indicates a potentially dangerous situation. If this dangerous situation is not avoided, it may result in minor or moderate injury.
	This symbol indicates a warning. Failure to observe this warning may result in damage and/or destruction of the system.
	This symbol indicates a note. It is recommended that the note be observed.

Table 2. Symbol conventions

1.5. Structure of warning notices

Warning notices protect against possible personal injury and damage to property if observed. The magnitude of the danger is classified by the signal word.

Source of the danger
Possible consequences of non-compliance

Measures for avoidance/prohibitions

Danger sign
The danger sign indicates warnings that warn of personal injury.

Source of danger
The source of danger indicates the cause of the hazard.

Possible consequences of non-compliance
The possible consequences of ignoring the warning are e. g. crushing, burns or other serious injuries.

Measures/prohibitions
Measures/prohibitions include actions that must be taken to avoid a hazard (e. g. stop the drive) or that are prohibited to avoid a hazard.

1.6. Terms and abbreviations

The following terms and abbreviations are used in the assembly and service instructions:

Term/Abbreviation	Meaning
AC	Alternating Current
AVU	Automatic off-grid switch
BMS	Battery Management System
DC	Direct Current
EMS	Energy Management System
Energy Meter	Electricity meter for the inverter at the grid connection point
IBN	Commissioning
GCP	Grid connection point
PE	Protective earth conductor
VDE	German Association for Electrical, Electronic & Information Technologies
Widget	Component of FENECON Online Monitoring

Table 3. Terms and abbreviations

2. Safety

2.1. Intended use

The automatic off-grid switch is a supplement to the electrical energy storage system.
It ensures automated, independent and all-pole switching of the entire household consumption from the mains supply to the emergency power output of the inverter (and back when the mains supply is restored). Manual switching from outside is also possible.

> The compliant grid disconnection still takes place in the inverter. The automatic off-grid switch is used exclusively for switching the consumer loads.

2.2. Qualification of staff

The system must only be installed and maintained by qualified personnel.

2.2.1. Qualified electricians

Qualified electricians include persons who

- are able to carry out work on electrical systems due to their technical training, knowledge and experience, including knowledge of all relevant standards and regulations.
- have been commissioned and trained by the operator to carry out work on electrical systems.
- are familiar with how the automatic off-grid switch works.
- recognize hazards and prevent them by taking appropriate protective measures.

2.2.2. Service staff

Service personnel includes manufacturer personnel or specialist personnel instructed and authorized by FENECON GmbH who must be requested by the operator to work on the system (e. g. assembly, repair, maintenance, etc.).

2.3. General information about the automatic off-grid switch

- Only qualified electricians are allowed to install the automatic off-grid switch and make cable connections.
- The automatic off-grid switch must only be used under the specified conditions (see Technical data AVU-63-21).
- Do not immerse the unit in water, moisten it or touch it with wet hands.
- Maintain clearances to water sources.

- Keep the automatic off-grid switch away from children and animals.
- The automatic off-grid switch can cause electric shock and burns due to short-circuit currents.
- Keep the automatic off-grid switch away from heat sources.
- Do not use the automatic off-grid switch if color changes or mechanical damage are detected during assembly, normal operation and/or storage.
- Do not set up or use the automatic off-grid switch near open flames, heaters or high-temperature sources.
- The heat can cause insulation to melt.
- Do not throw or drop the unit.
- Read and adhere to the instructions for installation and operation in order to avoid damage due to incorrect operation.
- Do not step on the unit.

2.3.1. Installation, operation and maintenance

Always observe the following safety instructions when installing, operating or maintaining the automatic off-grid switch:

- Installation/maintenance work and making cable connections must only be carried out by qualified electricians.
- Place on a dry, insulating mat and do not wear any metal objects (e. g. watches, rings and necklaces) during maintenance work/operation.
- Use insulated tools and wear personal protective equipment (PPE).
- Live contacts with a potential difference must not touch each other.
- Measure the battery voltage with a multimeter and ensure that the output voltage is 0 V in Off Mode.
- If an abnormality is detected, switch off the device immediately.
- Only continue the maintenance work after the causes of the anomaly have been removed.

2.3.2. Fire protection

- Do not expose the unit to direct sunlight.
- Avoid contact with conductive objects (e. g. wires).

3. Technical data AVU-63-21

3.1. General

Designation		Value/dimension
Installation/ Ambient conditions	IP classification	IP20
	Installation site	Indoor
	Operating altitude above sea level	≤ 2,000 m
	Overvoltage category (OVC)	||
	Protection class	I (PE protective conductor)
	Max. Humidity	95 %
	Installation/operating temperature	-5 °C to +45 °C
	Grid connection	L1, L2, L3, N, PE
	Fuse protection of grid connection	63 A
	Residual current monitoring	Observe requirements depending on installation location
	Rated frequency	50 Hz to 60 Hz
	Output voltage AC	400 V
	Max. Mains operation current	63 A
	Suitable network configurations	TN-S and TT
	Load connection	L1, L2, L3, N
Emergency power operation	Apparent power emergency power operation	15,000 VA
	Max. Current emergency power operation	21.7 A
	Network configuration emergency power operation	TN-S
	Switchover times	Mains failure > Emergency power supply operation: approx. 3 s Emergency power supply operation > Mains operation: approx. 3 s
Certification/guideline	Complete system	CE
General	Width | Depth | Height in mm	486 | 147 | 486
	Weight, approx.	16 kg
	Degree of soiling	2
	Mechanical force/impact resistance	IK8

Table 4. Technical data — Automatic off-grid switch

3.2. Dimensions

The dimensions are given in mm.

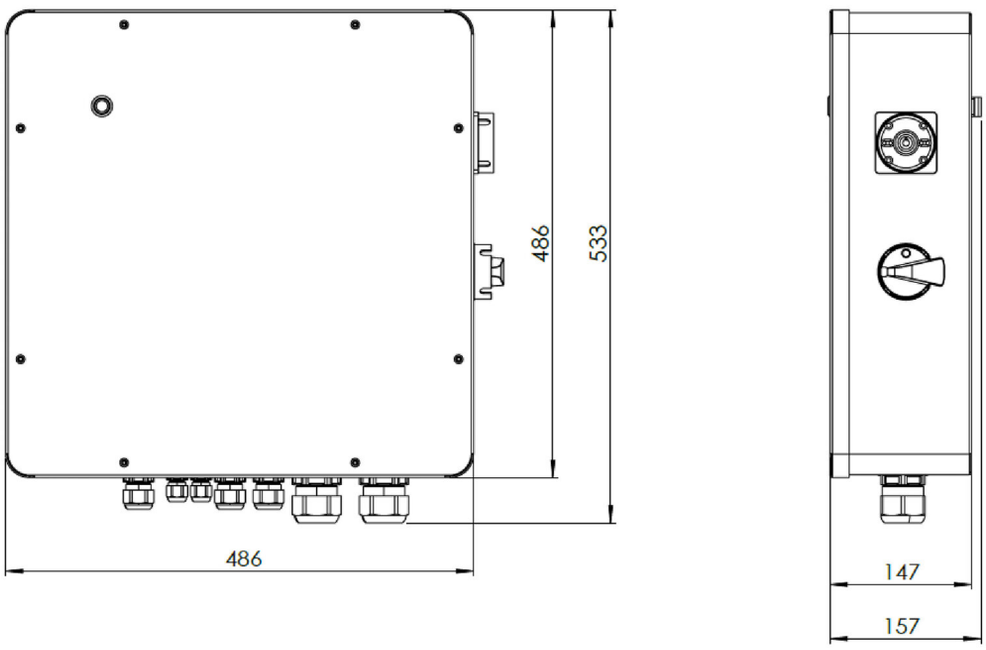

Image 1. Automatic off-grid switch — Dimensions

3.3. Terminal assignment

3.3.1. Overview — Interior

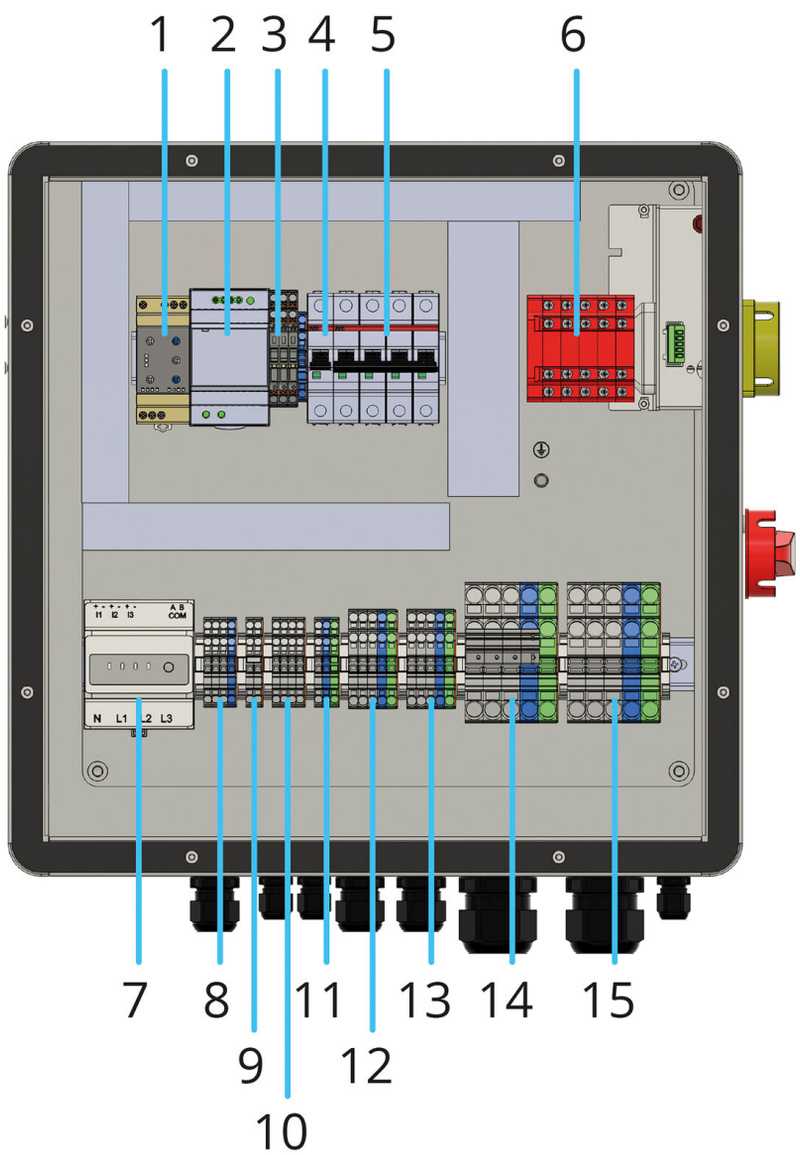

Image 2. Overview — Interior — Automatic off-grid switch

3.3. Terminal assignment

List item	Description
1	3-phase monitoring relay — incl. neutral monitoring
2	DIN rail power supply unit 12 V/DC; 4.5 A; 54 W
3	3 x fuse terminals (incl. fuse) + 1 x feed-through terminal
4	Automatic circuit breaker: C6 miniature circuit breaker; 1-pole
5	Automatic circuit breaker: C32 miniature circuit breaker, 4-pole
6	Gave motorized switch (automatic off-grid switch)
7	Optional: FENECON Home 10 energy meter
8	Feed-through terminal blocks for the power supply of the energy meter
9	Feed-through terminal blocks Internal power supply (12 V)
10	Feed-through terminal blocks for connection to the relay — for LED status query
11	Feed-through terminal blocks for the power supply to the EMS box
12	Feed-through terminals for connecting to the inverter — OnGrid/grid
13	Feed-through terminal blocks for connection to the inverter — OffGrid/emergency power
14	Feed-through terminal block for grid connection
15	Feed-through terminal blocks for connecting consumer loads

Table 5. Overview — Interior — Automatic off-grid switch

3.3.2. Detailed terminal assignment

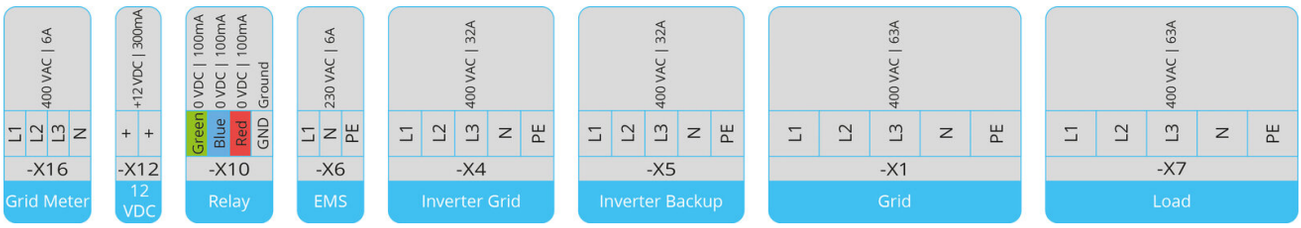

Image 3. Detailed terminal assignment — Automatic off-grid switch

List item	Description
X16	Optional: Supply FENECON Home 10 energy meter
X12	12 V DC
X10	Relay status
X6	AC supply — EMS box
X4	Inverter — Grid
X5	Inverter — Off-Grid
X1	Grid connection
X7	Load connection

Table 6. Detailed terminal assignment — Automatic off-grid switch

4. General description

The automatic off-grid switch is a supplement to an electrical energy storage system. The unit allows for an unrestricted supply of the consumer loads with max. 43 kW or 63 A in parallel mains operation.
The automatic off-grid switch ensures automated, independent switching of the entire household consumption from the grid supply to the emergency power output of the inverter and back when the grid is restored. Manual switching is also possible. For the installation of the storage system, please follow the instructions of the respective system found here: docs.fenecon.de/en!

> The compliant grid disconnection still takes place in the inverter. The automatic off-grid switch is used exclusively for switching the consumer loads.

4.1. System structure

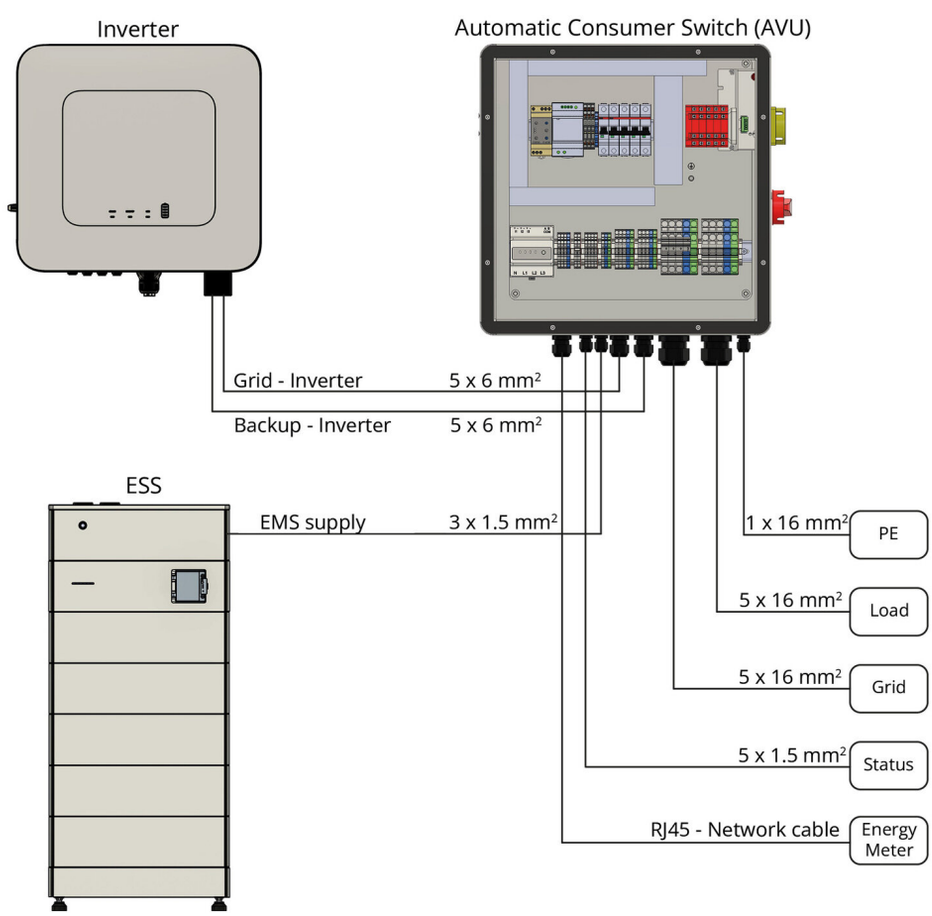

Image 4. System — Schematic representation with optional components

5. Assembly preparation

5.1. Scope of delivery

The following items are included in the scope of delivery.

Image	Amount	Description
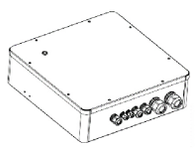	1	Automatic off-grid switch
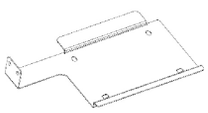	1	Wall bracket
	2	Screw for wall mount
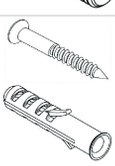	4	M6 x 67 mm screw and 8 x 60 mm screw anchor for wall mounting
	1	Nut, body washer and spring washer for earthing
	2	Filler plug for unused bolt connections
	1	Assembly and operating instructions

Table 7. Scope of delivery — Automatic off-grid switch

5.2. Tools required

The following tools are required for assembly of the system components:

Image	Description	Image	Description
	Pencil	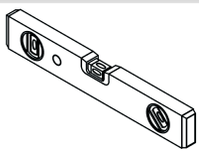	Spirit level
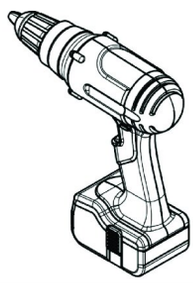	Impact drill or cordless screwdriver	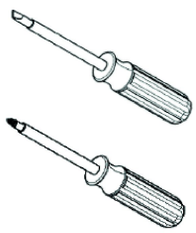	Screwdriver set
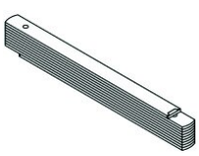	Meter stick	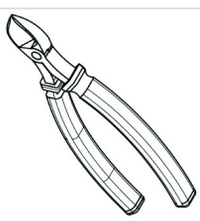	Side cutter
	Allen key, 3 mm		Flat spanners
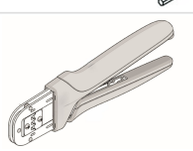	Crimping tool		Multimeter
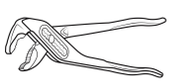	Pliers for cable glands		Protective eyewear
	Safety footwear		Dust mask
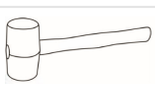	Rubber mallet		Vacuum cleaner
	Wire stripper		Protective gloves
	Torque wrench	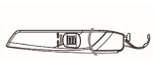	Stripping knife

Table 8. Tools required

The tool is *not* included in the scope of delivery.

6. Assembly — Automatic Off-grid Switch

Before installation, carefully check whether the packaging and the product are damaged and whether all accessories listed in the scope of delivery are included. In the event that accessories are missing or damaged, contact the manufacturer/dealer.

6.1. Safety instructions

Electric shock from live parts
Death or serious injury to the body and limbs due to electric shock when touching live cables connected to the system.

Before starting work, disconnect the automatic off-grid switch from the power supply and secure it against being switched on again.

Wait at least 5 minutes after switching off before starting work on the inverter.

Observe the safety instructions of FENECON GmbH.

Do not touch any exposed live parts or cables.

Do not pull the terminal strip with connected DC conductors out of the slot under consumer load.

Wear suitable personal protective equipment for all work.

Fire and explosion
Death or serious injury to body and limbs due to fire or explosion; in the event of a fault, an ignitable gas mixture may be produced inside the inverter. Switching operations in this condition can cause a fire inside the product or tripped an explosion.

In the event of a fault, do not carry out any direct actions on the electrical energy storage system.

Ensure that unauthorized persons do not have access to the electrical energy storage system.

Disconnect the battery modules from the inverter via the DC fuse on the battery tower.

Switch off the AC miniature circuit breaker or, if it has already tripped, leave it switched off and secure it against being switched on again.

Only carry out work on the inverter (e.g. troubleshooting, repair work) with personal protective equipment for handling hazardous substances (e.g. protective gloves, eye and face protection and respiratory protection).

Arcs due to short-circuit currents
Death or serious injury to the body and limbs due to burns caused by heat development and electric arcs due to short-circuit currents of the battery modules

Before carrying out any work on the battery modules, de-energize the battery modules.

Comply with all safety instructions from the battery manufacturer.

Destruction of a measuring device due to overvoltage
Death or serious injury to the body and limbs due to electric shock when touching a live meter housing: An overvoltage can damage a meter and cause a voltage to be applied to the meter housing.

Only use measuring devices with an input voltage range of at least 600 V or higher.

Non-intended use
If the product is used in a manner not defined by the manufacturer, the device's protection measures may be impaired.

Weight of the automatic off-grid switch
Injuries to the body and limbs due to crushing when falling during transportation or assembly of the automatic off-grid switch

Transport and lift the automatic off-grid switch carefully.

Note the weight of the automatic off-grid switch and its center of gravity.

Wear suitable personal protective equipment for all work on the automatic off-grid switch.

Sand, dust and moisture
Ingress of sand, dust and moisture can damage the unit and impair its function.

Only open the unit if the humidity is within the limit values and the environment is free of sand and dust.

Electrostatic charge
Touching electronic components can damage or destroy the unit via electrostatic discharge.

Ground yourself before touching a component.

Cleaning agents
The use of cleaning agents can damage the automatic off-grid switch and parts of the automatic off-grid switch.

Clean the automatic off-grid switch and all its parts with only a cloth moistened with pure water.

The installation must only be carried out by a qualified electrician.
Installation or intervention in the power supply system can lead to very serious injuries or a fatal electric shock.

Connection or installation must only be carried out by qualified personnel/qualified electricians in a de-energized state!

It is essential to check that there is no voltage!

Always observe the accident prevention regulations (in Germany: UVV) and VDE regulations!

6.2. Pictograms

Pictograms on the system indicate dangers, prohibitions and instructions. Illegible or missing pictograms must be replaced by new ones.

Pictogram	Meaning	Description
	Warning of dangerous electrical voltage	Pictogram on the enclosure, and marking of components which do not clearly show that they contain electrical equipment which may be the cause of a risk of electric shock.
	General warning sign	
	Battery charging hazard warning	Pictogram on housing and marking of components that do not clearly indicate that they contain electrical equipment that may give rise to a battery charging hazard.

Pictogram	Meaning	Description
	No open flames; fire, open sources of ignition and smoking prohibited	Pictogram on the enclosure and marking of components that do not clearly indicate that they contain electrical equipment that may present a risk of open flames, fire, open sources of ignition and smoking.
	Protective earthing symbol	
	Separate collection of electrical and electronic equipment	
	Note instructions	
	Wear protective headgear	
	Wear protective footwear	
	Wear protective gloves	
	CE mark	
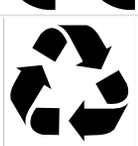	Product is recyclable.	

Table 9. Pictograms

6.3. Operating materials/equipment

6.3.1. Electrolyte solution of the battery modules

- Electrolyte solution is used in the battery modules (lithium iron phosphate).
- The electrolyte solution in the battery modules is a clear liquid and has a characteristic odor of organic solvents.
- The electrolyte solution is flammable.
- The electrolyte solution in the battery modules is corrosive.
- Contact with electrolyte solution can cause severe burns to the skin and damage to the eyes.
- Do not inhale the vapors.
- If the electrolyte solution is swallowed, induce vomiting.
- Leave the contaminated area immediately after inhaling vapors.
- Eye and skin contact with leaked electrolyte solution must be avoided.

  After skin contact: Immediately wash skin thoroughly with neutralizing soap and consult a doctor if skin irritation persists.

  After eye contact: Immediately flush eye(s) with running water for 15 minutes and seek medical advice.

Delayed treatment can cause serious damage to health.

6.3.2. Electrical equipment

- Work on electrical equipment may only be carried out by qualified electricians.
- The five safety rules must be observed for all work on electrical components:
  1. Disconnect.
  2. Secure against restarting.
  3. Check that there is no voltage.
  4. Earth and short-circuit.
  5. Cover or shield neighboring live parts.
- Maintenance work may only be carried out by trained specialist personnel (service personnel).
- Before starting work, carry out visual checks for insulation and housing damage.
- The system must never be operated with faulty or non-operational electrical connections.
- To avoid damage, lay supply lines without crushing and shearing points.
- Only insulated tools may be used for maintenance on uninsulated conductors and terminals.

- Switch cabinets (e. g. inverter housing) must always be kept locked. Only authorized personnel with appropriate training and safety instructions (e. g. service personnel) should be allowed access.
- Observe the inspection and maintenance intervals for electrical components specified by the manufacturer.
- To avoid damage, lay supply lines without crushing and shearing points
- If the power supply is disconnected, specially marked external circuits may still be live!
- Some equipment (e. g. inverters) with an electrical intermediate circuit can still carry dangerous residual voltages for a certain time after disconnection. Before starting work on these systems, check that they are voltage-free.

6.4. Personal protective equipment

Depending on the work carried out on the system, wear PPE (personal protective equipment):

- Protective footwear
- Protective gloves, cut-resistant if necessary
- Protective eyewear
- Protective headgear

6.5. Spare and wear parts

The use of spare and wear parts from third-party manufacturers can lead to risks. Only original parts or spare and wear parts approved by the manufacturer may be used. The instructions for spare parts must be observed. Further information can be found in the wiring diagram.

Further information must be requested from the manufacturer.

6.6. IT security

FENECON energy storage systems and their applications communicate and operate without internet connection. The individual system components (inverters, batteries, etc.) are not directly connected to the internet or accessible from the internet. Sensitive communications via the internet are processed exclusively via certificate-based TLS encryption.

Access to the programming levels is not barrier-free and is accessible at different levels depending on the qualifications of the operating personnel. Safety-relevant program changes require additional verification.

FENECON processes energy data of European customers exclusively on servers in Germany and these are subject to the data protection regulations applicable in this country.

The software used is checked using automated tools and processes established during development in order to keep it up to date and to rectify security-relevant vulnerabilities at short notice. Updates for FEMS are provided free of charge for life.

6.7. Installation conditions and clearances at the installation site

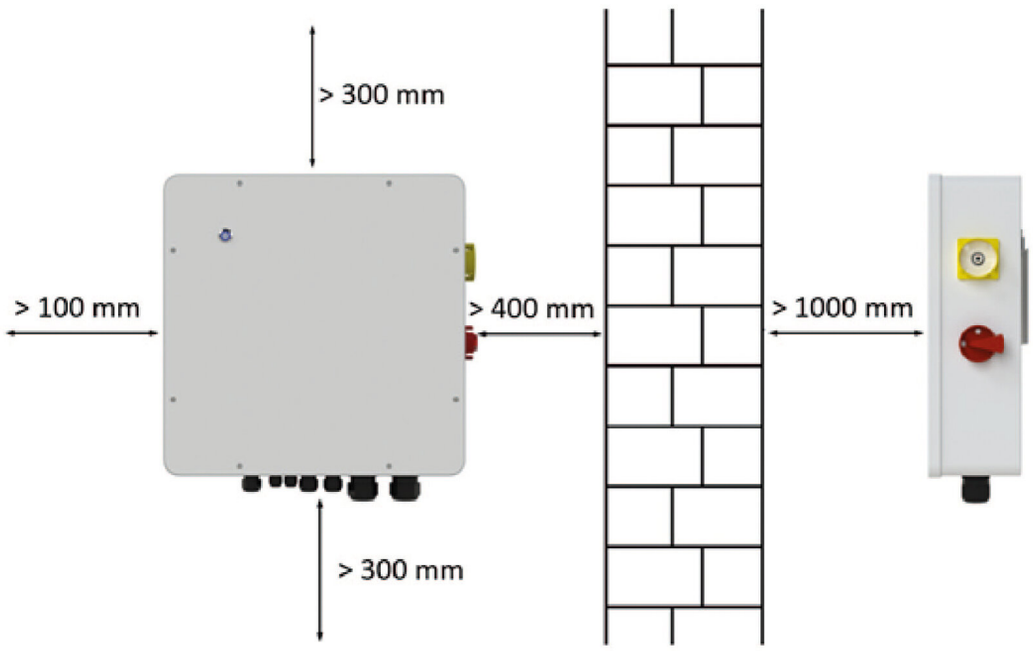

Image 5. Clearances at the installation site

Installation conditions

The wall must be stable enough for mounting the automatic off-grid switch and must not be flammable.

The room should be permanently ventilated.

Maintain a clearance of at least 300 mm above the automatic off-grid switch.

Maintain a clearance of at least 300 mm below the automatic off-grid switch (cable ducts are not measured here).

Maintain a clearance of at least 1000 mm from the front of the automatic off-grid switch.

Keep at least 100 mm clearance to the left of the automatic off-grid switch.

Maintain a clearance of at least 400 mm to the right of the automatic off-grid switch.

6.8. Wall mounting

Proceed as follows to install the automatic off-grid switch on a wall:

Assembly of the wall bracket

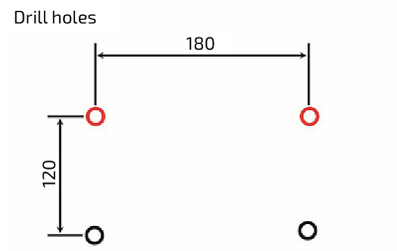	1. To attach the automatic off-grid switch, drill 8 mm holes for the enclosed screw anchors according to the specified dimensions.
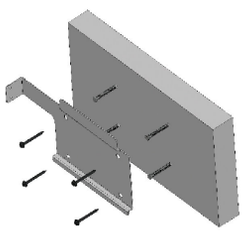	2. Attach the wall bracket to the wall. Anchors and screws are included for this purpose. Always check the condition of the wall to see whether the screw anchors can be used.
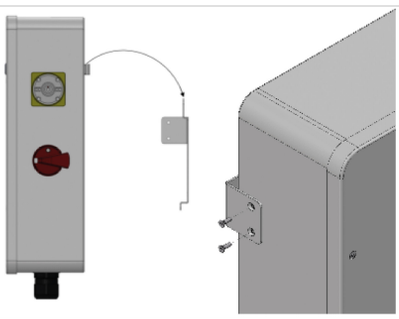	3. Hang the automatic off-grid switch on the wall bracket using the bracket on the back. 4. Then secure on the left-hand side using the bolts provided.
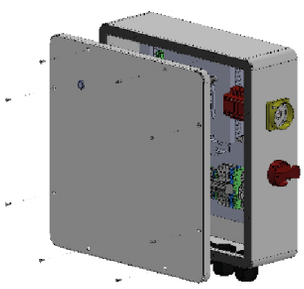	5. Loosen the eight bolts on the front and remove the cover (Torx T20).

7. Electrical installation

7.1. Overview of the connections

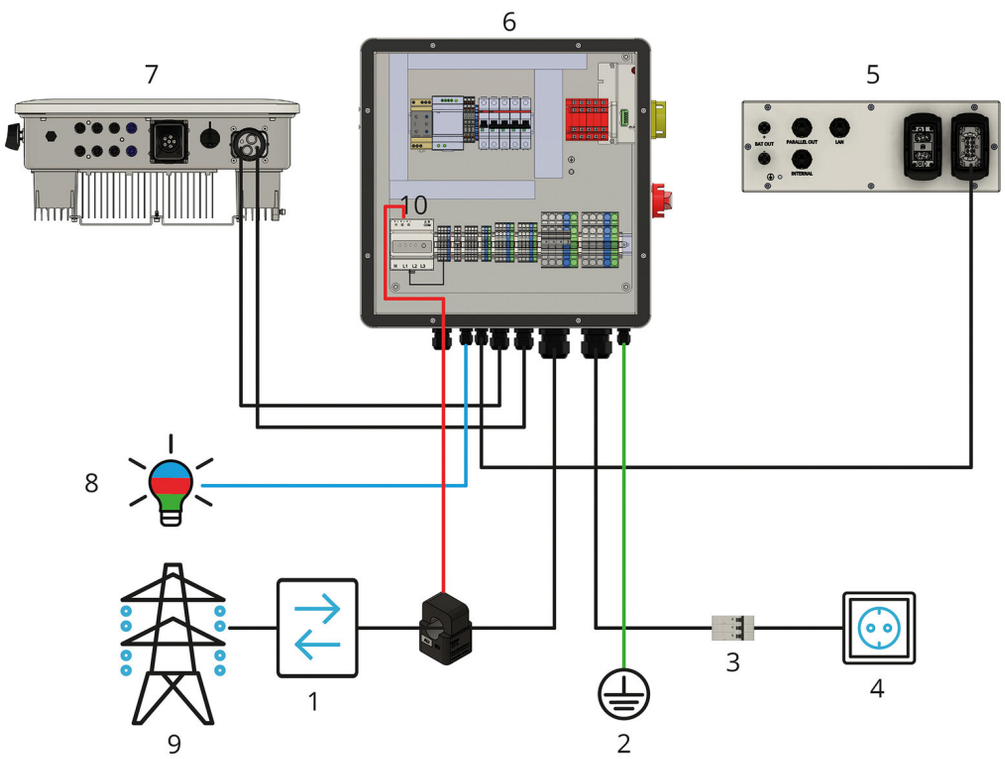

Image 6. Overview of the connections

List item	Description
1	Bi-directional meter from energy supplier
2	Earth circuit connector or earthing connection
3	Fuse protection of the consumer loads with RCD type A and suitable MCBs
4	Consumer loads/emergency power consumers
5	EMS box connection (uninterruptible) (AC supply to the EMS box)
6	Automatic off-grid switch (AVU)
7	Inverter
8	External status signal
9	Grid
10	Optional: FENECON Home 10 energy meter (energy flow direction meter)

Table 10. Components of the general overview

Between positions 1 and 6:

- In addition, the currently valid national regulations and the specifications of the relevant grid operator must be observed. (If an RCD is required by the grid operator, an RCD type A with a tripping current of 300 mA is recommended; at 30 mA, unwanted shutdowns may occur).
- The currently valid national regulations, the specifications of the associated grid operator and the manufacturer's specifications must be complied with.

Optional earthing connection:
Depending on the network configuration, earthing can be done via the supply cable or through the earth circuit connector.

7.2. Connection between the individual components

7.2.1. Connection to the inverter

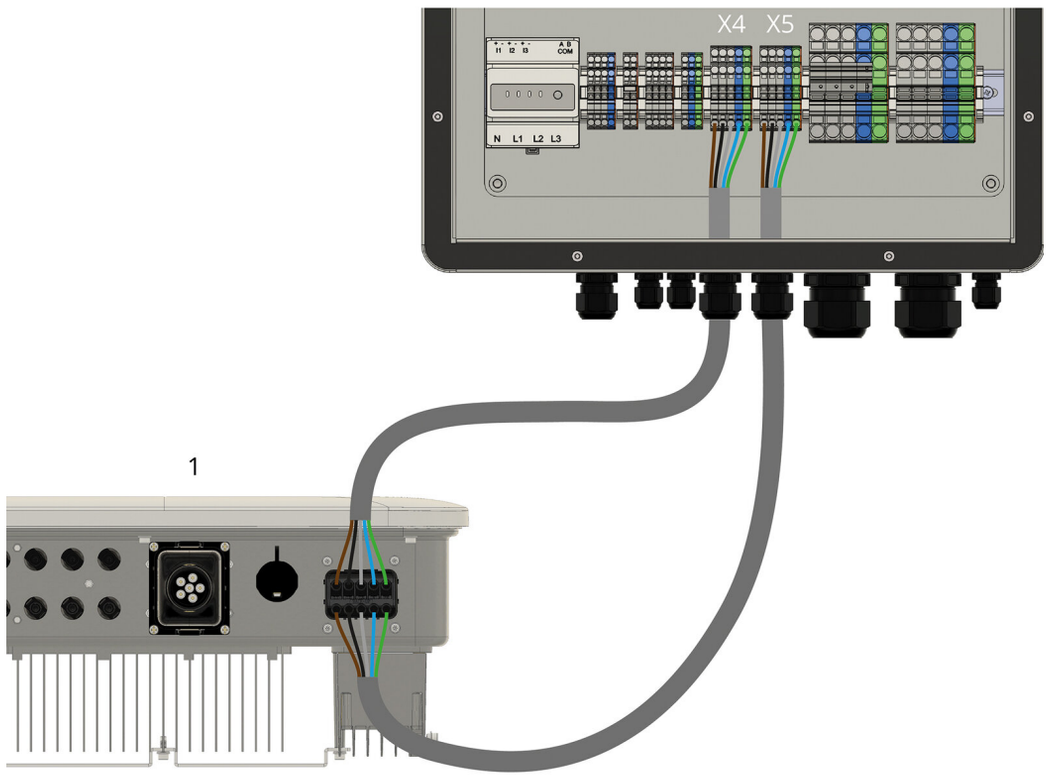

Image 7. AC connection — Inverter

List item	Description
1	Inverter
X4	Grid connection inverter to X4 (on-grid) (5 x 4 mm^2)
X5	Emergency power connection inverter to X5 (OFF-Grid) (5 x 4 mm^2)

Table 11. Components for the inverter connection (not included in the scope of delivery)

7.2.2. Connection to the EMS box

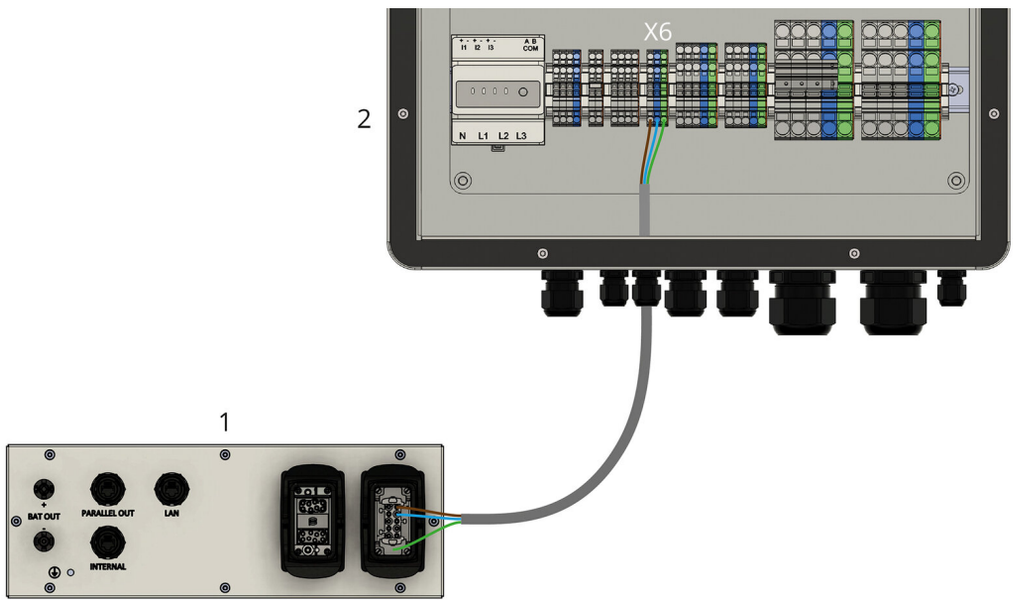

Image 8. AC supply to the EMS box

List item	Description
1	EMS box (AC connection)
X6	AC supply connection — EMS box to X6 (3 x 1.5 mm^2)

Table 12. Components — EMS box connection (not included in the scope of delivery)

7.2.3. Energy meter connection without external generators

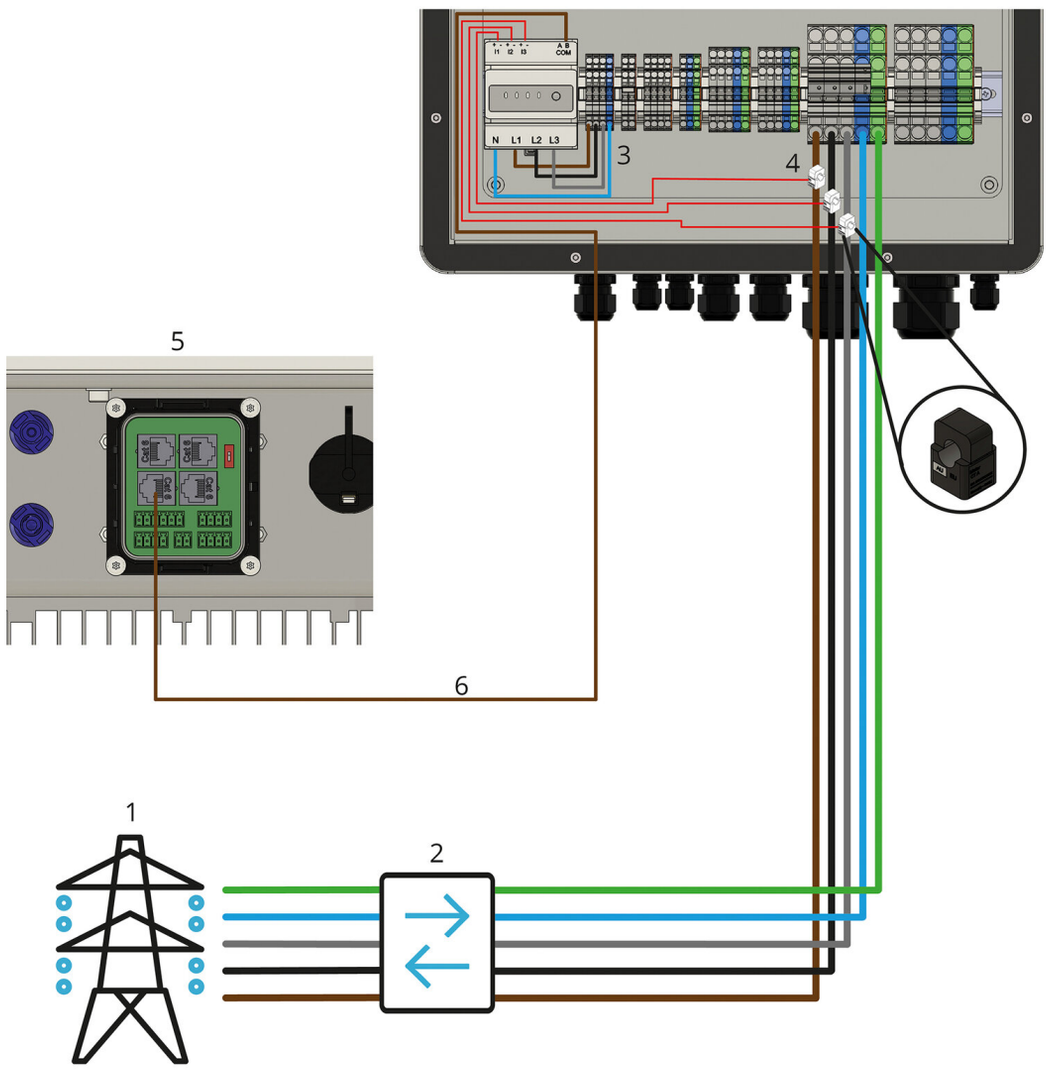

Image 9. Energy meter in the automatic off-grid switch

List item	Description
1	Grid
2	Bi-directional meter of the energy supply company (grid operator)
3	Power supply from energy meter X16 (4 x 1.5 mm^2)
4	Split-core CT (directly behind the grid operator's meter) already pre-assembled on the Energy Meter
5	Inverter
6	Modbus connection between Energy Meter and inverter

Table 13. Components for the SmartMeter connection (optional)

If you have an existing system with an Energy Meter already installed, the Energy

> Meter does not need to be modified.

7.2.4. Connection of an external status display (optional)

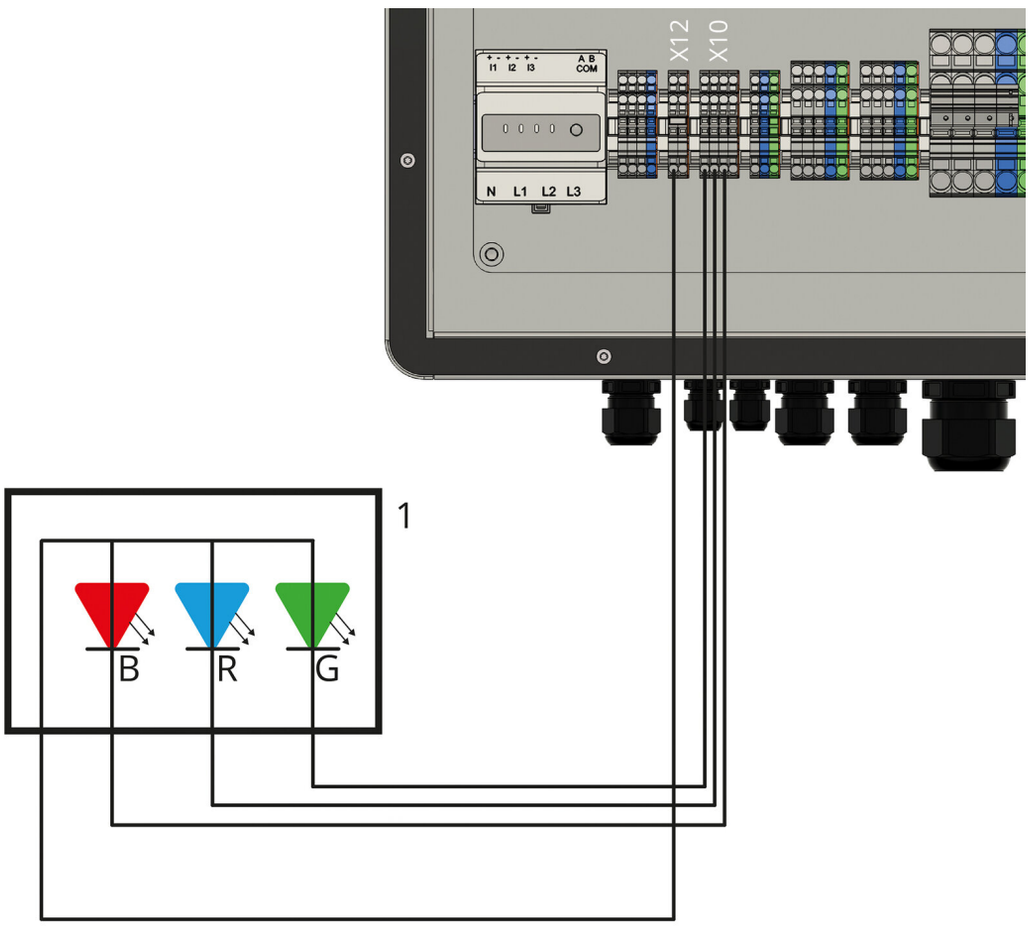

Image 10. External status display connection

List item	Description
1	External status display (three states, each state: 12 V DC/100 mA)

Table 14. Components for an external status display (optional)

The external status display is a separate installation by the installer.
No product is provided for this, neither as part of the scope of delivery nor as an option.

7.3. Electrical installation with external AC generator

7.3.1. Overview of the connections

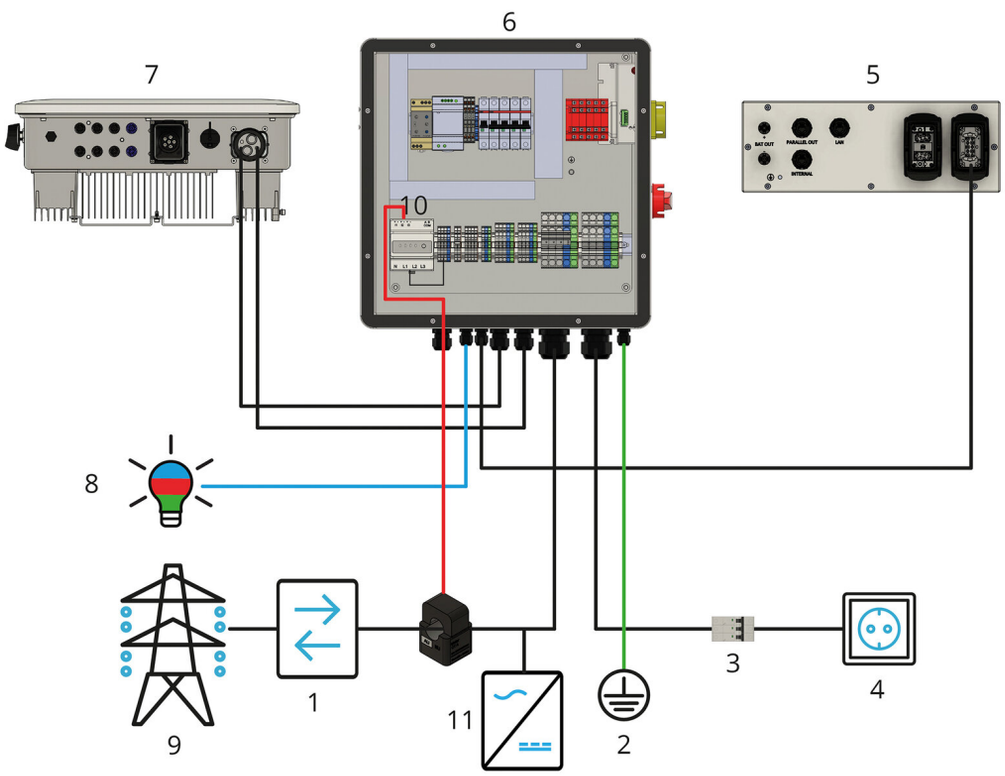

Image 11. Installation overview with external AC generator

List item	Description
1	Bi-directional meter of the energy supply company (grid operator)
2	Earth circuit connector or earthing connection
3	Fuse protection of the consumer loads with RCD type A and suitable MCBs
4	Consumer loads/emergency power consumers
5	EMS box connection (uninterruptible) (AC supply to the EMS box)
6	Automatic off-grid switch (AVU)
7	Inverter
8	External status signal
9	Grid
10	FENECON Home 10-Energy meter (energy flow direction meter)
11	External AC generator

Table 15. Components of the complete overview with external AC generator

PV inverters, CHP units, small wind turbines or other generators in the existing sub-

distribution board must be installed at point 11.

7.3.2. Energy meter connection with external AC generator

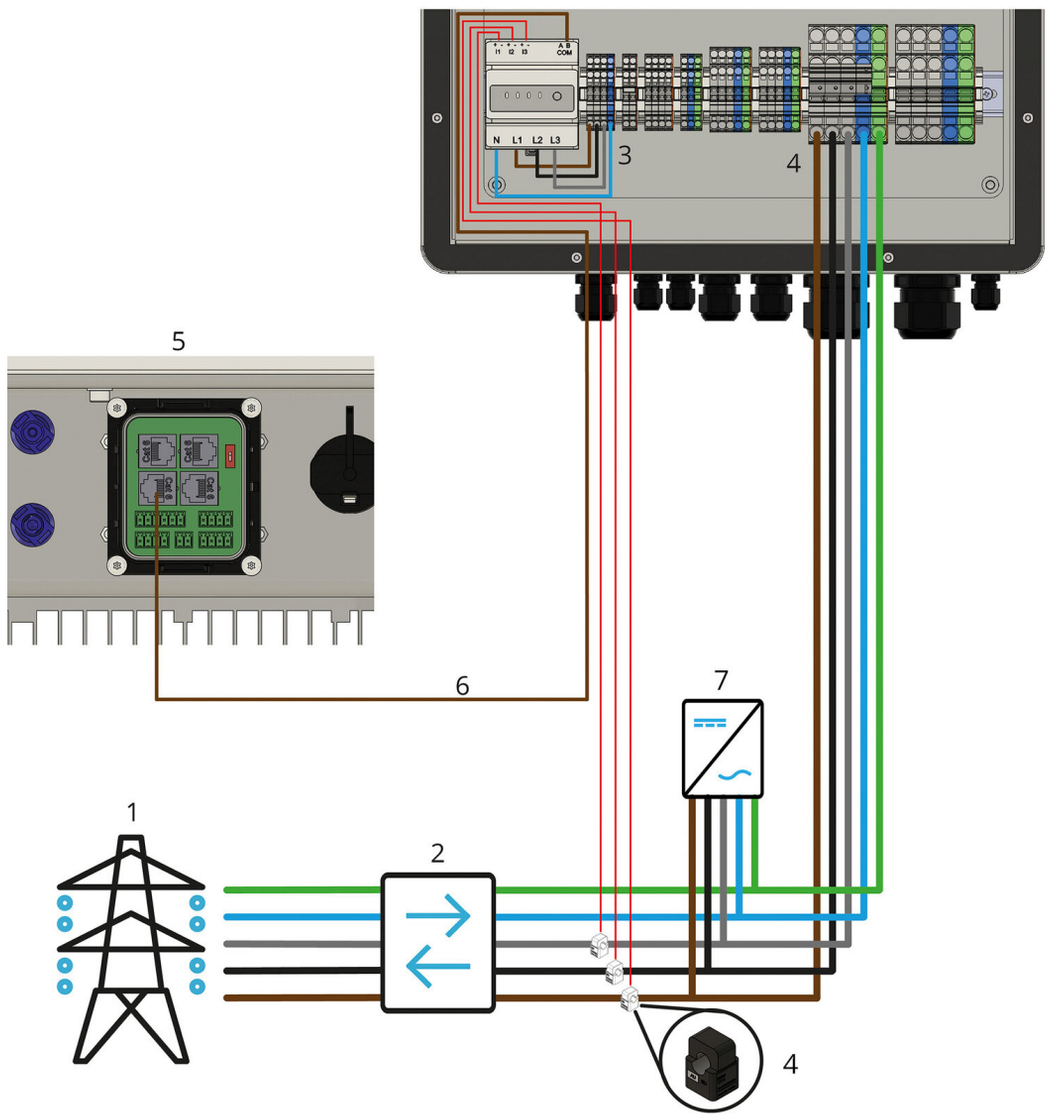

Image 12. Energy meter connection with external AC generator

List item	Description
1	Grid
2	Bi-directional meter of the energy supply company (grid operator)
3	FENECON Home 10 Energy meter (voltage supply from X16: 4 x 1.5 mm^2)
4	Split-core CT (directly behind AC generator) already pre-assembled on the smart meter
5	FENECON Inverter
6	Modbus between Smart Meter and FENECON inverter
7	AC generator (directly behind the grid operator's meter and behind the split-core CTs of the energy meter)

Table 16. Components for the smart meter connection & external AC generator (optional)

If you have an existing system with an Energy Meter already installed, the Energy Meter does not need to be modified.

8. Display and operation

8.1. LED status display

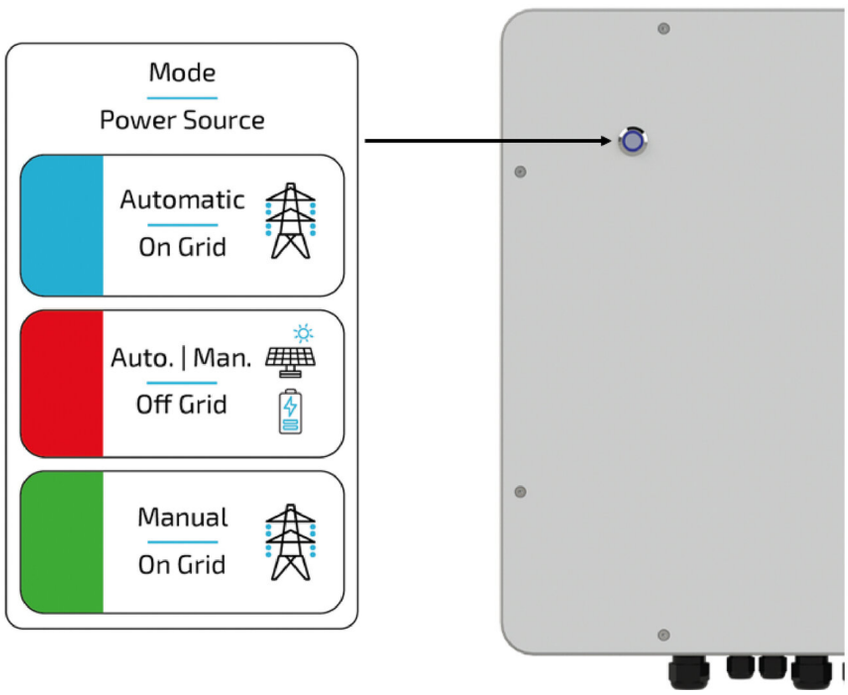

Image 13. LED status display

List item	Description
Blue	The system is in automatic mains operation
Red	The system is in emergency power mode (automatic/manual)
Green	The system is in manual mains operation

Table 17. LED status display

8.2. Operating activities

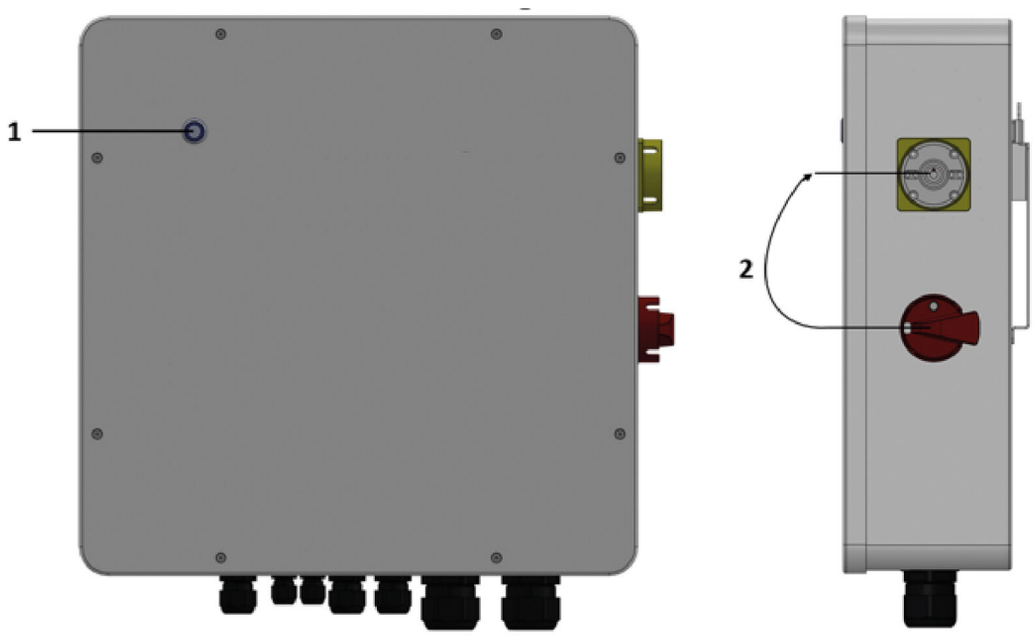

Image 14. Operating activities

List item	Switch position	Description
1	Press LED switch	Motor in switch 2 is switched off (LED lights up green)
2	Put on switch and turn	The mode can be changed manually. Pos. 1: Mains operation (LED lights up green) Pos. 0: Off Pos. 2: Emergency power mode (LED lights up red)

Table 18. Automatic off-grid switch operation

9. Initial commissioning

9.1. Checking the installation, connections and cabling

Check the system as follows before initial commissioning:

- All components (clearances, environment, mounting) are installed correctly.
- All internal wiring is complete and properly connected.
- All external supply lines (power supply, communication cable) are properly connected.
- All connected loads are matched to the system and the necessary settings have been made.
- All necessary tests of the system were carried out in accordance with the standards.

9.2. Settings on the monitoring relay

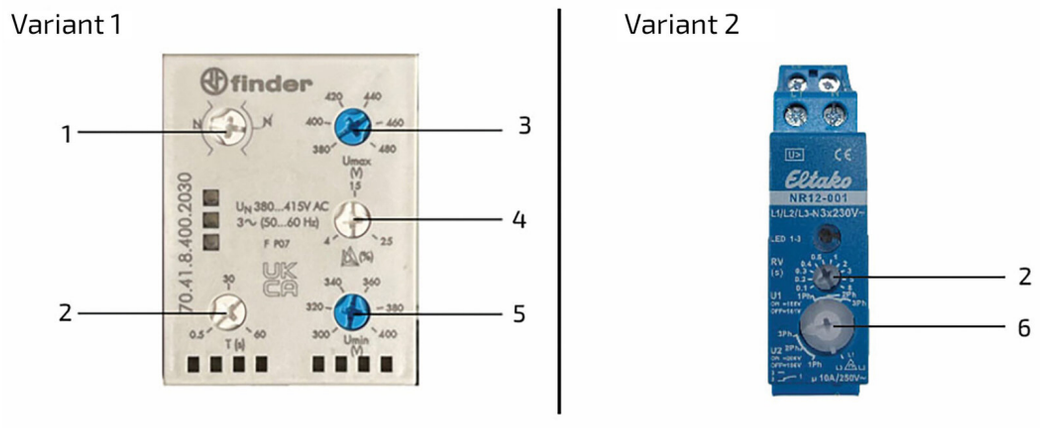

Image 15. Settings on the monitoring relay (depending on variant)

List item	Description
1	Neutral monitoring (with or without) **Setpoint: With neutral**
2	Switch-off delay (between 0.5 and 60 seconds) **Setpoint: 0.5 seconds or 0.1 seconds**
3	Maximum voltage (between 380 and 480 V) **Setpoint: 450 V**
4	Nominal voltage (between 4 and 25 %) **Setpoint: 15 %**
5	Minimum voltage (between 300 and 400 V) **Setpoint: 350 V**
6	Rotary function switch for various pick-up and drop-out voltages **Setpoint: U2 - 3Ph**

Table 19. Settings on the monitoring relay

9.3. Switching on the miniature circuit breakers

The miniature circuit breakers in the automatic off-grid switch must then be switched on.

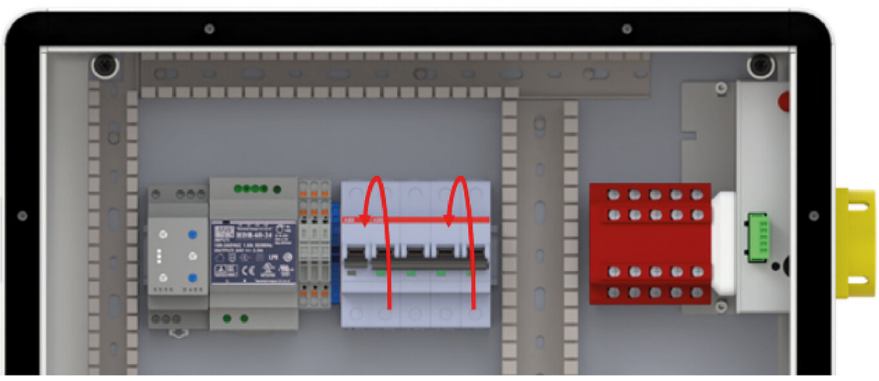

Image 16. Racking in the miniature circuit breakers in the automatic off-grid switch

9.4. Final assembly

Proceed as follows for final assembly of the automatic off-grid switch:

Installation of the cover

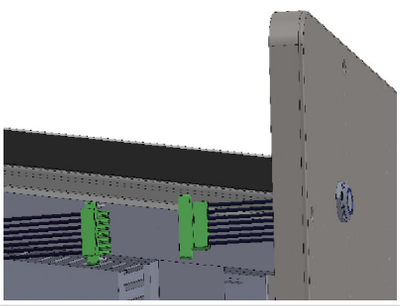	1. Connect the plug of the push-button in the cover to the plug in the automatic off-grid switch.
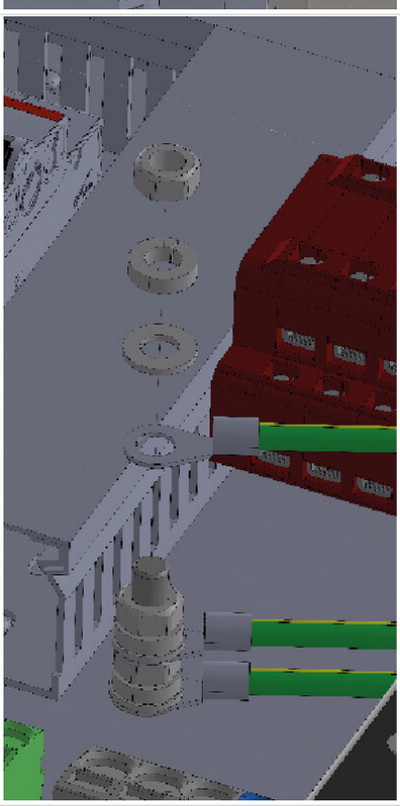	2. Attach the grounding wire in the automatic off-grid switch to the grounding bolt on the mounting plate as shown. Use the enclosed body washer, spring washer and nut (M8) for this. Then tighten with a torque wrench to 8.9 Nm (wrench size 13).
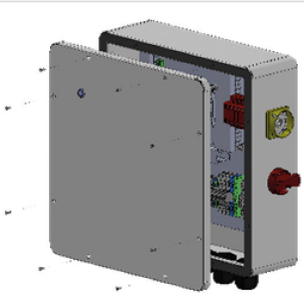	3. Replace the cover and tighten the 8 bolts (Torx T20).

9.5. Switching the system on/off

9.5.1. Switch on

The system must be switched on in the following order:

1. Switch on the main fuse.
2. Switch on the inverter.
3. Switch the battery energy storage system.
4. Check whether the push-button is set to automatic mode.

The automatic off-grid switch now automatically switches to grid operation when the grid is connected.

If no emergency power has been activated at the Home, commissioning must be carried out again to activate the emergency power function.

9.5.2. Switching off

If the system must be taken out of operation, please proceed in the following order:

1. Switch off the battery energy storage system.
2. Switch off the inverter.
3. Switch off the main fuse on the meter.
4. Switch off the circuit breaker in the automatic off-grid switch.

Make sure the device is de-energized before dismantling or modifying it!

9.6. Replacing the cartridge fuses

If a cartridge fuse is defective, it must be replaced as shown in the following image.

The fuse must only be replaced by a qualified electrician.
To replace the fuse, it is necessary to open the automatic off-grid switch and touch any live parts. It is essential to ensure that there is no voltage beforehand and to observe the 5 safety rules!

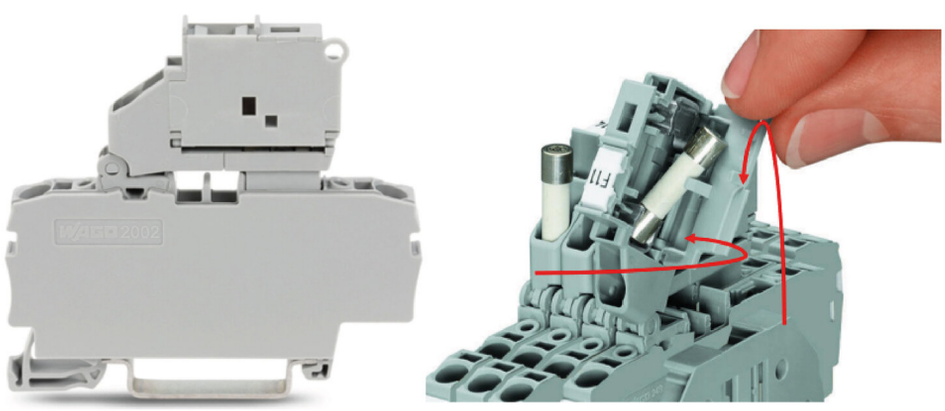

Image 17. Replacing the cartridge fuses

Only cartridge fuses, medium time delay (250 V/6.3 A), are to be used! (Littelfuse 021506.3)

Electrical data

Materials	Housing: Caps: nickel-plated brass Cables: tin-plated copper
Clamping strength	MIL-STD-202, method 211, test condition A
Solderability	MIL-STD-202 Method 208
Marking of the product	Cable 1: Brand logo, current and voltage values Cable 2: Test seal
Operating temperature	-55 °C to +125 °C
Thermal shock test	MIL-STD-202, method 107, test condition B (5 cycles, -65 °C to +125 °C)
Vibration test	MIL-STD-202, method 201
Humidity test	MIL-STD-202, method 103, test condition A (high humidity (95 %) and elevated temperature (40 °C) for 240 hours)
Salt spray test	MIL-STD-202, method 101, test condition B

As long as the inverter or the grid are switched on, voltage is present!

10. FENECON Service

If the system malfunctions, contact FENECON Service:

Phone: +49 (0) 9903 6280 0

E-mail: service@fenecon.de

Our service hours:
Mon. to Thurs.: 8 a.m. to 12 p.m. | 1 p.m. to 5 p.m.
Fri.: 8 a.m. to 12 p.m. | 1 p.m. to 3 p.m.

11. Technical maintenance

11.1. Tests and inspections

No regular tests and inspections need to be carried out on the system in accordance with the normative specifications.

11.2. Maintenance work

No regular maintenance work needs to be carried out on the system in accordance with the normative specifications.

11.3. Repairs

Contact FENECON Service in the event of defective components.

12. Handover to the operator

12.1. Information for the operator

The following information must be provided to the operator:

Component	Information/Document	Comment
System	Assembly and operating instructions	

Table 20. Information for the operator

13. Dismantling and disposal

13.1. Dismantling

Only have the automatic off-grid switch dismantled by authorized qualified electricians.

13.2. Disposal

- The automatic off-grid switch must not be disposed of in normal household waste.
- Disposal of the product must comply with local regulations for disposal.

14. Index

14.1. Image index

Image 1. Automatic off-grid switch — Dimensions
Image 2. Overview — Interior — Automatic off-grid switch
Image 3. Detailed terminal assignment — Automatic off-grid switch
Image 4. System — Schematic representation with optional components
Image 5. Clearances at the installation site
Image 6. Overview of the connections
Image 7. AC connection — Inverter
Image 8. AC supply to the EMS box
Image 9. Energy meter in the automatic off-grid switch
Image 10. External status display connection
Image 11. Installation overview with external AC generator
Image 12. Energy meter connection with external AC generator
Image 13. LED status display
Image 14. Operating activities
Image 15. Settings on the monitoring relay (depending on variant)
Image 16. Racking in the miniature circuit breakers in the automatic off-grid switch
Image 17. Replacing the cartridge fuses

14.2. Table index

Table 1. Version/revision
Table 2. Symbol conventions
Table 3. Terms and abbreviations
Table 4. Technical data — Automatic off-grid switch
Table 5. Overview — Interior — Automatic off-grid switch
Table 6. Detailed terminal assignment — Automatic off-grid switch
Table 7. Scope of delivery — Automatic off-grid switch
Table 8. Tools required
Table 9. Pictograms
Table 10. Components of the general overview
Table 11. Components for the inverter connection (not included in the scope of delivery)
Table 12. Components — EMS box connection (not included in the scope of delivery)
Table 13. Components for the SmartMeter connection (optional)
Table 14. Components for an external status display (optional)
Table 15. Components of the complete overview with external AC generator
Table 16. Components for the smart meter connection & external AC generator (optional)
Table 17. LED status display
Table 18. Automatic off-grid switch operation
Table 19. Settings on the monitoring relay
Table 20. Information for the operator