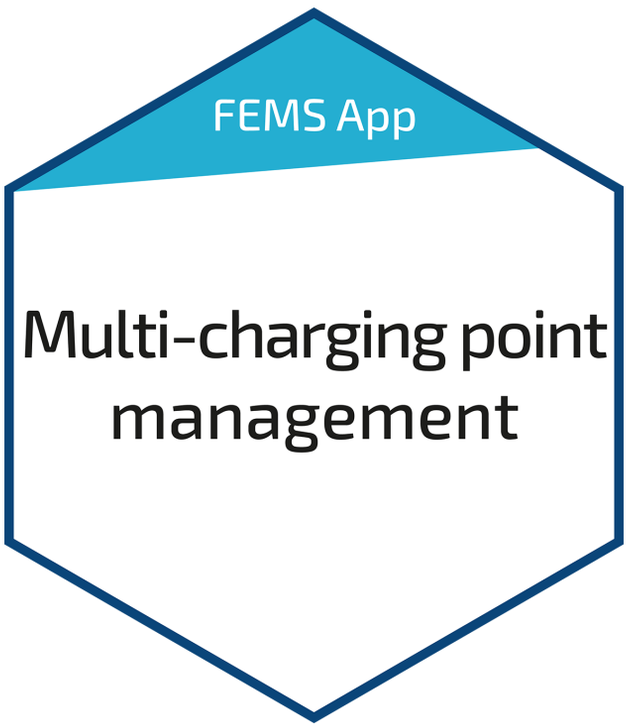

FEMS App Multi Charge Point Management

Version:2023.4.1

Table of Contents

1. Introduction 2

2. FEMS App Multi Charge Point Management 2

2.1. Why should your EV charging park be integrated in FEMS? 2

2.2. Advantages of the FEMS App Multi Charge Point Management 2

3. Functionality 3

3.1. Visualization and configuration in Online Monitoring 5

4. Compliance with the maximum power reference at the grid connection point 9

4.1. FAQ & Troubleshooting. 9

4.2. Further information 10

5. Contact us 11

6. Directories 12

6.1. List of illustrations 12

1. Introduction

Dear customer,

Thank you for choosing the "FEMS App Multi Charge Point Management". You are welcome to send us your suggestions so that we can further improve the quality of our products.

2. FEMS App Multi Charge Point Management

2.1. Why should your EV charging park be integrated in FEMS?

FEMS, the open-source-based energy management system from FENECON, gives you the freedom to design your Energy Journey. Together with manufacturers of wallboxes, heat pumps, heating elements, etc., we are continuously working on further integrations for the FEMS App Multi Charge Point Management.

Compatible wallboxes offer various manufacturer-side advantages that support you on your Energy Journey. New partnerships with other manufacturers are constantly being forged.

FENECON accompanies you step by step on your Energy Journey towards 100% self-sufficiency: For example, owners of a photovoltaic system can use the combination of FENECON electrical energy storage and electric vehicle to charge the solar power they produce themselves instead of feeding it into the grid at low prices.

Use the FEMS App AC Charging Station or FEMS App DC Charging Station to control your wallbox.



Since 01/04/2023, you will receive the FEMS App Multi-Charging-Point Management free of charge from the second charging station or charging point.

2.2. Advantages of the FEMS App Multi Charge Point Management

- *Full control over charging processes*

  Control your EV charging park via the FEMS Online Monitoring. Start or stop charging processes at individual charging stations.

- *Dynamic load management*

  The intelligent FEMS Online Monitoring dynamically adjusts the charging current to the maximum available grid withdrawal. In addition, the FENECON electrical energy storage system provides additional power as required to avoid cost-intensive peak loads.

- *Prioritization*

  Prioritize your charging stations. The higher the prioritization of a charging station, the later it will

be shut down when there is a high load.

- *Authorization*

  Authorization can be set up via the manufacturer's web interface. This means that only authorized users with a valid RFID card can log in to your charging stations.

- *Billing*

  A backend provider can be integrated via the manufacturer's web interface. New partnerships with other billing service providers are constantly being forged.

- *One-time purchase, no recurring costs*

  After the one-off purchase, there are no further costs for the app — lifetime updates included.

- *OpenEMS Community*

  The software is being further developed together with universities, institutes and other manufacturers of energy management systems in the global OpenEMS community.

- *Energy Journey*

  We are already thinking about the next steps of your personal Energy Journey.

3. Functionality

The FEMS App Multi Charge Point Management consists of ...

1. a minimized widget view in which important information is displayed briefly and concisely. Among other things, the amount of charging stations and the total charging power are displayed.
2. a visualization and configuration view in which the prioritization of the individual charging stations can be carried out.

Dynamic load management works as follows:

1. If no electric vehicles are charging at the charging stations and there is sufficient grid power, the FENECON electrical energy storage is charged.

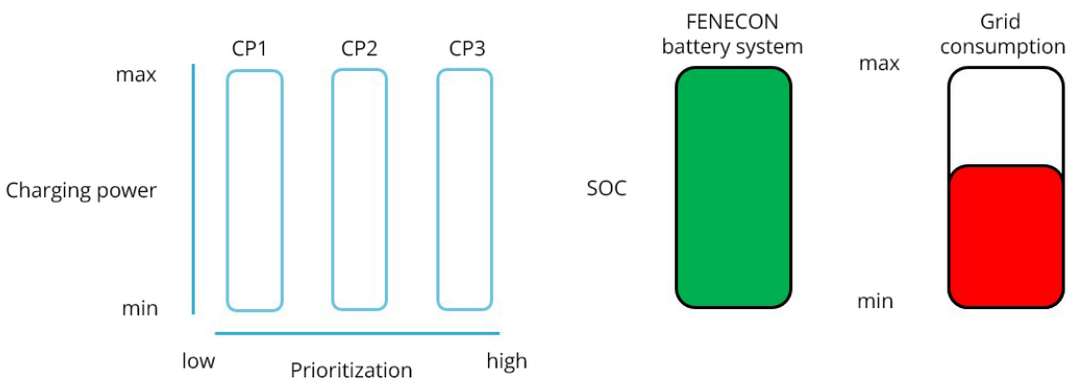

Image 1. Load management — No vehicle is charging

2. If electric vehicles are charging at the charging stations and there is sufficient grid power, each charging station is released the maximum charging power.

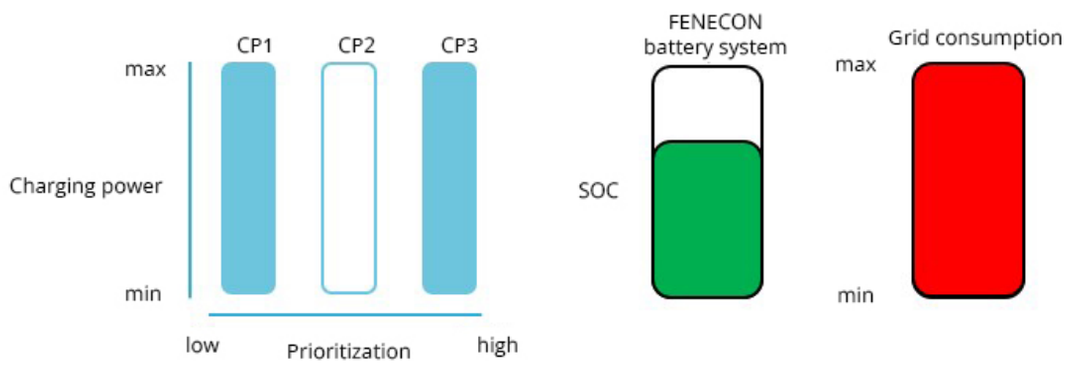

Image 2. Load management — vehicles are charged, maximum network power

3. If more electric vehicles are charging at the charging stations than the grid power can provide, the FENECON electrical energy storage system provides the required power.

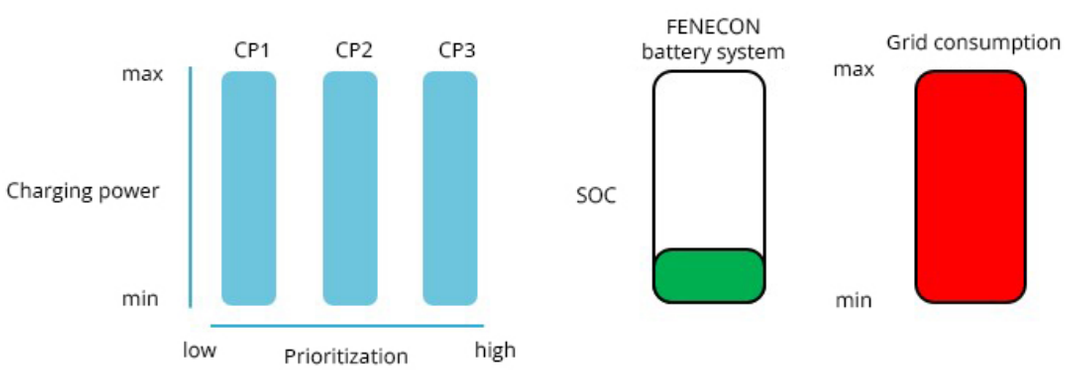

Image 3. Load management — More vehicles are charged, grid power supported by electrical energy storage

4. If more electric vehicles are charging at the charging stations than the grid power can provide and the FENECON electrical energy storage is empty, FEMS App Multi Charge Point Management regulates the low-priority vehicles down to the minimum charging power (usually 6 A).

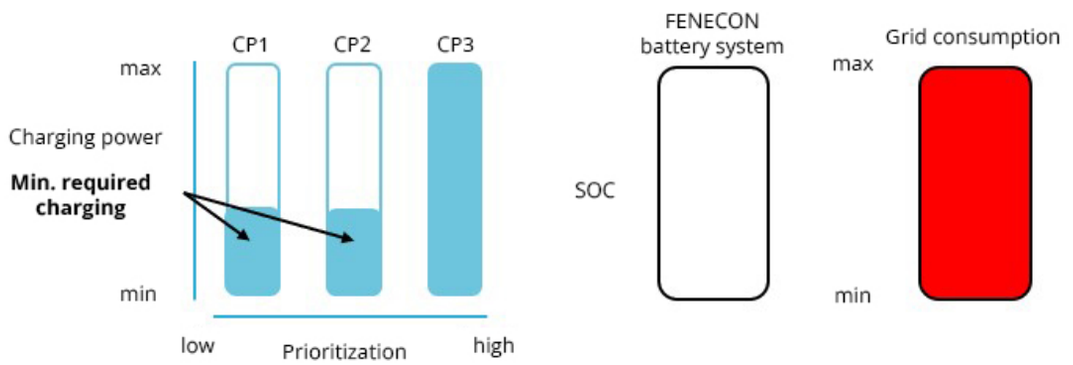

Image 4. Load management — prioritization when electrical energy storage is empty

5. If more power is required for another consumer load, all vehicles are reduced in a first step and all low-priority vehicles are switched off completely in a second step.

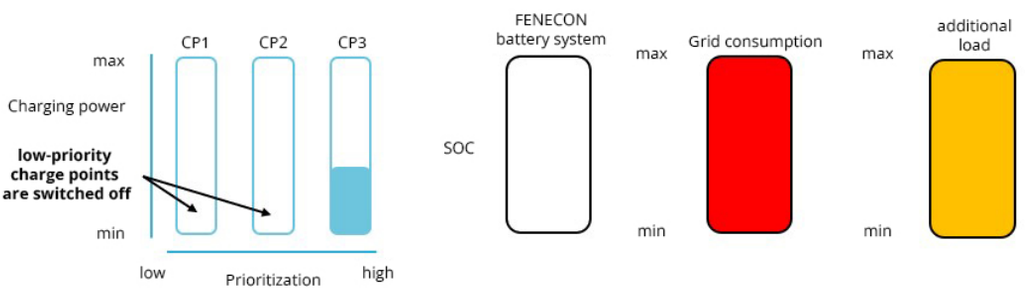

Image 5. Load management — prioritization for other consumer loads

6. FEMS plans the charging of the electrical energy storage again after each load, so that the next Peak Shaving is ensured.

3.1. Visualization and configuration in Online Monitoring

From 01/04/2023, the multi-charging point management function will be included from the second charging station or the second charging point. You no longer need to purchase an additional app for this!

Using multi-charging point management, several charging points can be linked and controlled in a cluster. The following functions are available within the cluster:

- Control algorithm for controlling multiple charging stations (incl. charging points)

- Avoidance of load peaks at the grid connection point through:

  targeted discharge of the electricity storage system and

  dynamic limitation of charging power at the charging stations/charging points according to prioritization

As soon as Multi-Charging-Point Management has been activated on your system, you will see the following widget in your monitoring:

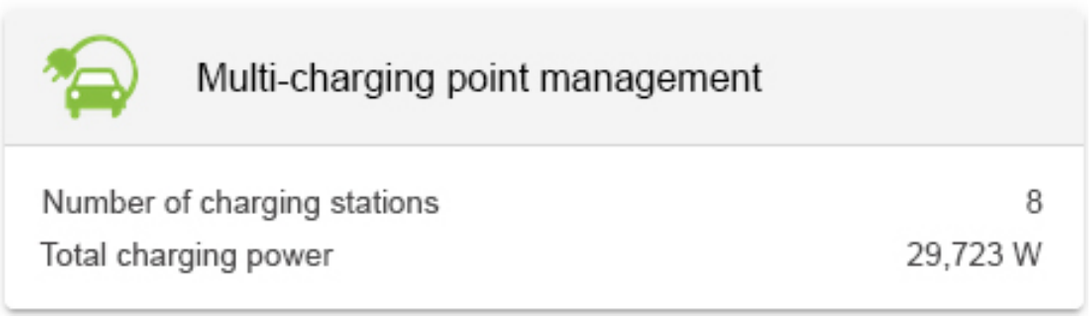

Image 6. MLPM — Flat widget

In MLPM — Flat widget you can see the amount of charging stations or charging points that are taken into account in Multi-Charging-Point Management (here: 8), as well as the current total charging power in watts (here: approx. 30 kW).

Click on the widget to open the detailed view of the app:

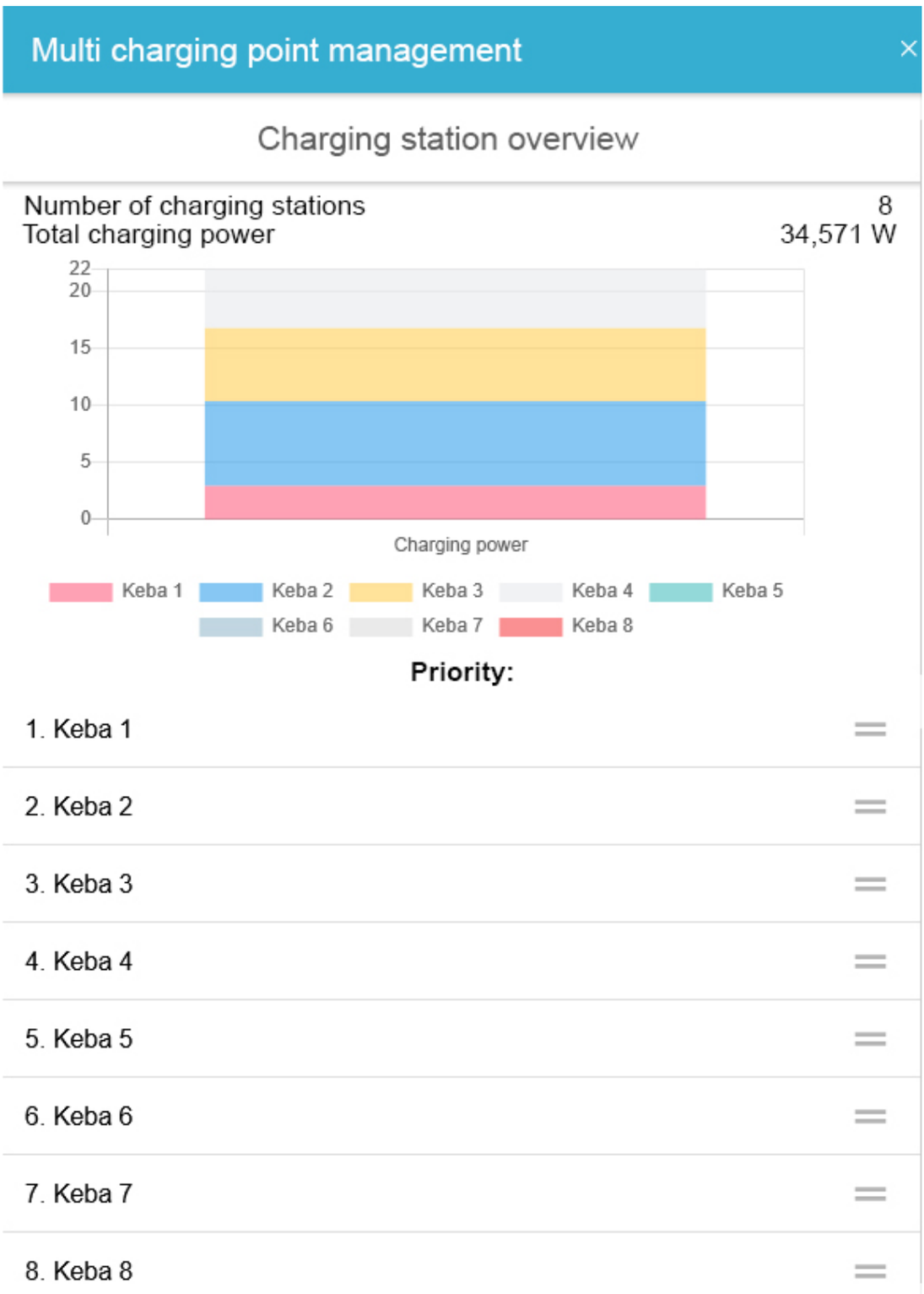

Image 7. MLPM — Detailed view

The individual charging stations/charging points are broken down in MLPM — Detailed view. In the example above, 8 Keba c-series charging stations have been integrated.

The prioritization of the individual charging stations/charging points can be adjusted using the selection elements on the right (see MLPM — Detailed view — Change prioritization) by selecting them and then moving them in the list. The higher the prioritization of a charging station/charging point, the

later it will be down-regulated or the earlier it will be up-regulated again as soon as power is available again.

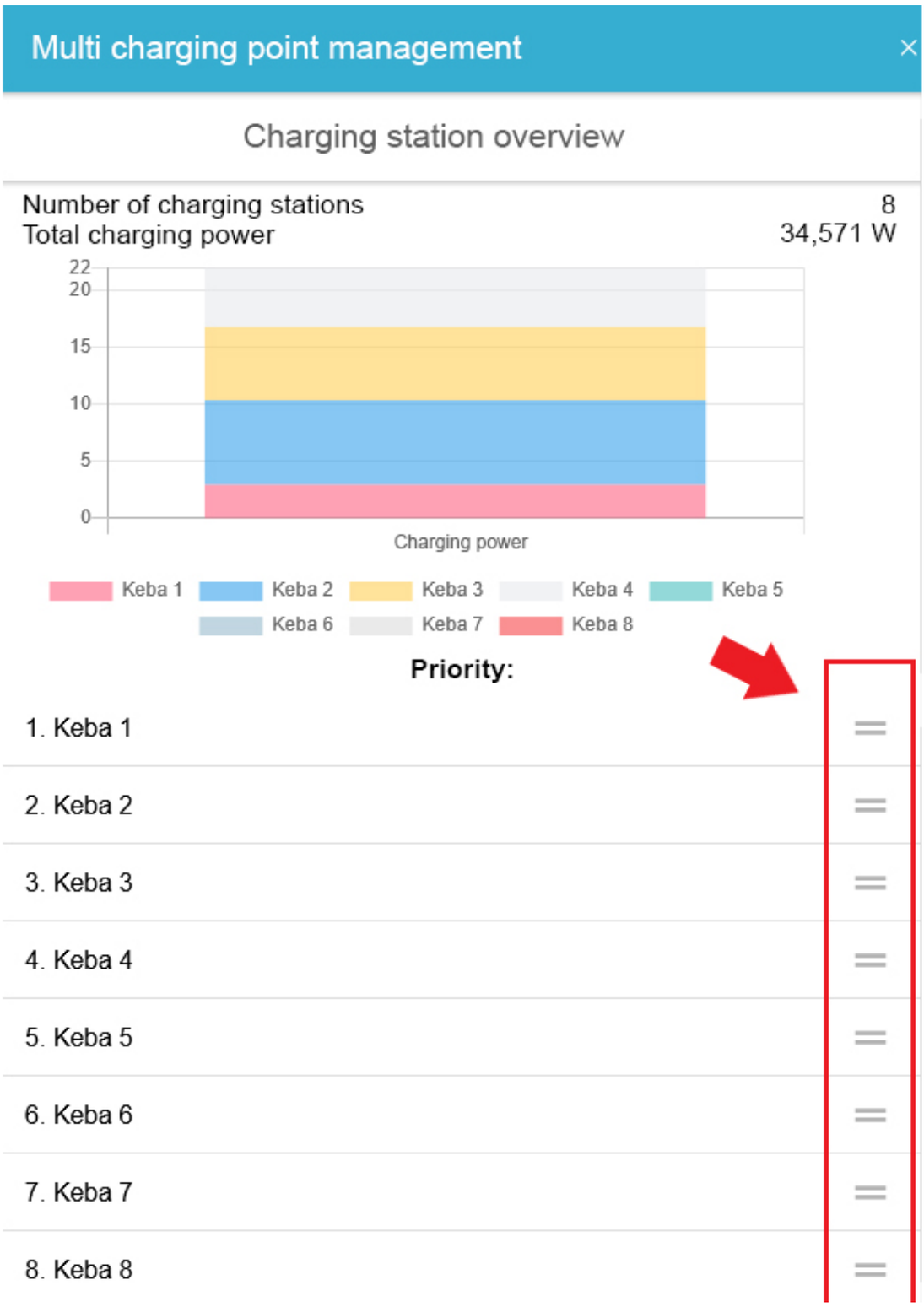

Image 8. MLPM — Detailed view — Change prioritization

4. Compliance with the maximum power reference at the grid connection point

This manufacturer's declaration is applicable to electricity storage systems with the FENECON Energy Management System.

Using the FEMS App Multi Charge Point Management ensures that an adjustable total reference power (e. g. 11 kW) is not exceeded for all charging stations.

The manufacturer's declaration is expressly valid under the following conditions:

- The FENECON Energy Management System is online and active at all times.
- Officially supported charging stations from FENECON/FEMS are used.
- The FENECON Energy Management System is connected to the charging stations via the customer network at all times.
- The FENECON Energy Management System is connected to the grid meter at all times.
- The FEMS App Multi Charge Point Management is active at all times.

The FEMS App Multi Charge Point Management regulates the power values within the cluster. In combination with external management systems (such as RFID authorization, billing services, etc.), it may occasionally be necessary to plug in multiple times.

4.1. FAQ & Troubleshooting

Compatibility & Charging Infrastructure

Which FENECON storage systems is FEMS App Multi Charge Point Management compatible with?

The app is currently compatible with all current models of the FENECON Home, FENECON Commercial and FENECON Industrial series.

Which wall boxes and charging stations are integrated into the FENECON Energy Management System?

Below you will find a list of all compatible wallboxes and charging stations for an EV charging park:

Partner	Wallbox (model type)
KEBA GmbH	KEBA KeContact P30 x-series
	KEBA KeContact P30 c-series
Hardy Barth GmbH	eCharge Hardy Barth cPµ2 Pro
	eCharge Hardy Barth cPH2 2T22

Partner	Charging stations (model type)

Alpitronic GmbH	Hypercharger HCY50
	Hypercharger HCY150
	Hypercharger HCY300
	Hypercharger HCY400

Charging Park Size & Expansion

How many wall boxes and charging stations can be operated in a FENECON EV charging park?

In FEMS App Multi Charge Point Management, you can control a cluster of up to 8 charging points.

4.2. Further information

- We develop the algorithms and connections used in the "FEMS App Multi Charge Point Management" in cooperation with universities, institutes and other manufacturers of energy management systems in the global OpenEMS community.

  For more information about OpenEMS, visit www.openems.io.

  If you're interested, feel free to join the English-language discussion at the OpenEMS Community.

5. Contact us

For support, please contact:

FENECON GmbH
Gewerbepark 6
94547 Iggensbach

Phone — Service: +49 (0) 9903 6280 0
E-mail — Service: service@fenecon.de

6. Directories

6.1. List of illustrations

Image 1. Load management — No vehicle is charging
Image 2. Load management — vehicles are charged, maximum network power
Image 3. Load management — More vehicles are charged, grid power supported by electrical energy storage
Image 4. Load management — prioritization when electrical energy storage is empty
Image 5. Load management — prioritization for other consumer loads
Image 6. MLPM — Flat widget
Image 7. MLPM — Detailed view
Image 8. MLPM — Detailed view — Change prioritization